Project Name: _____ Type: _____

DIMENSIONS

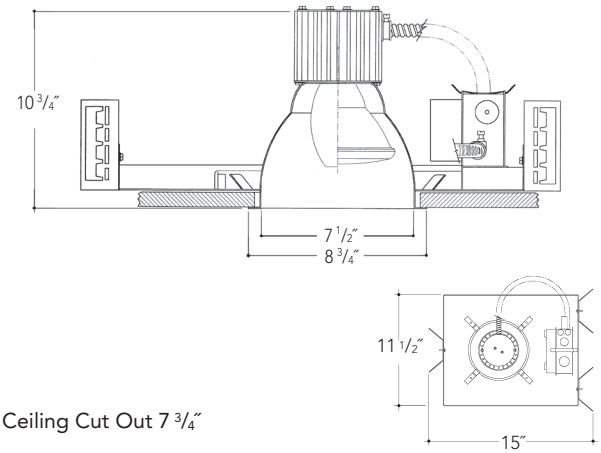

Ceiling Cut Out 7 3/4″

FEATURES

Adjustable height electrogalvanized plated steel mounting ears with cutouts for various mounting methods. Standard bars (included) are innovative and incorporate rigid formed cross sections, joist positioning tabs, integral nails, auxiliary nail holes, T-Bar slots and holes for locking bars to T-Bar using #8 self-tapping screws (by others). Bars extend 14″-24″. Ears will also accept Caddy Bar #517B for fast installation in T-Bar ceilings, bars extend 27″.

Electronic ballast, thermally protected. *UL Listed* component.

Heavy gauge electrogalvanized steel junction box, prewired and grounded with easy access from below. Listed for through branch circuit wiring.

Extruded aluminum heat sink socket cup with spring steel snap-in clips for fast assembly. *UL Listed* "open rated" pulse rated, 4KV, medium base porcelain socket, with nickel plated brass screw shell.

Heavy gauge spun aluminum reflector with self trimming white painted flange. Polished Flange available.

Electrogalvanized plated steel frame components with spring steel reflector clips for fast assembly of reflector.

REFLECTOR KIT

OPEN

8″ Aperture

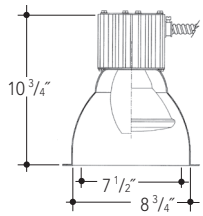

8000 Open

Finish Options

SCL	Specular Clear "Alzak"
SGC	Soft Glow Clear
ECL	Etch Clear
WHT	White Reflector

Options

PF	Polished Flange

OPEN BAFFLED

8″ Aperture

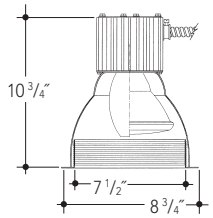

8050 Open Baffled

Finish Options

Specify reflector finish option - *see above*, then add baffle finish color

BL	Black Baffle
WH	White Baffle

WALL WASH

8″ Aperture

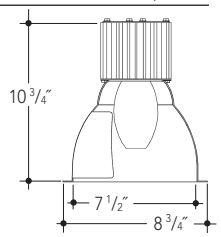

8102 Wall Wash

Finish Options

SCL	Specular Clear "Alzak"
SGC	Soft Glow Clear
ECL	Etch Clear

Options

PF	Polished Flange
DWW	Double Wall Wash

Features

Manufactured and Listed to UL 1598, ETL and CSA standards.
Suitable for Damp Locations.
Wet location under covered ceiling.

ORDERING INFORMATION

EXAMPLE: PA8MHO20E1-2-8000-SCL

Lamps and Wattage	Housing	Ballast	Reflector	Finish	Baffle	Options
PAR20/30/38						
20	PA8MHO20	E1-2	8000	SCL	BL	F
39	PA8MHO39	E3	Baffled	SGC	WH	R
70	PA8MHO70		8050	ECL		QR
100	PA8MHO100		Wall Wash	WHT		PR
ED17			8102			PF
50	A8MHO50					DWW
70	A8MHO70					GSK
100	A8MHO100					
150	A8MHO150					

Ballast Options

Electronic 120-277 volt is standard

E1-2	- Electronic	(120-277V)
E3	- Electronic	(347V)

Options Descriptions

F - Fused
R - Remodeler
QR - Quartz Restrike
PR - Plaster Ring
PF - Polished Flange
DWW - Double Wall Wash
GSK - Neoprene Foam Gasketing

Vantage reserves the right to change components, finishes or design details in any manner which does not alter the installed appearance or reduce performance and intended function.

▲ See Options pages for other options and finishes.
Vantage recommends the use of Philips or Sylvania lamps.