Project Name: _____ Type: _____

## DIMENSIONS

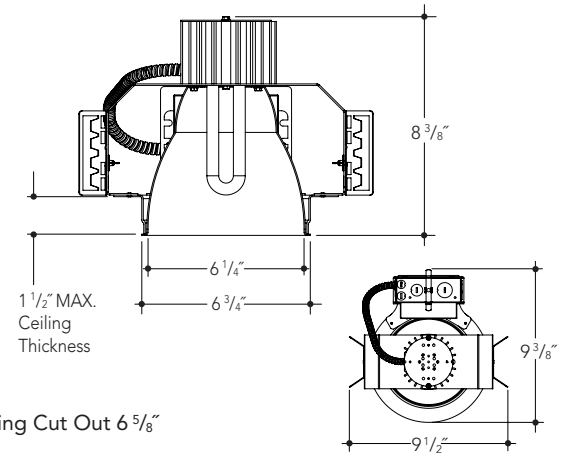


Ceiling Cut Out 6 5/8″

## FEATURES

Adjustable height electrogalvanized plated steel mounting ears with cutouts for various mounting methods. Standard bars (included) are innovative and incorporate rigid formed cross sections, joist positioning tabs, integral nails, auxiliary nailholes, T-Bar slots and holes for locking bars to T-Bar using #8 self-tapping screws (supplied by others). Bars extend 14″-24″. Ears will also accept Caddy Bar #517B for fast installation in T-Bar ceilings, bars extend 27″.

Electronic ballast, Class P, 50/60 HZ-120-277, Programmed Start, thermally protected, 98% Power Factor, 1.00 Ballast Factor, <10% THD, Class A sound rated. Minimum starting temperature -18°C/0°F.

Heavy gauge electrogalvanized steel junction box, prewired and grounded with easy access from below, listed for through branch circuit wiring.

Aluminum heat sink socket cup with Zinc plated steel hardware. Reflector keyslot installation for fast assembly. *UL Listed* socket.

Heavy gauge spun aluminum low iridescent reflector. Keyslots to secure reflector.

Aluminum frame with Integral Plaster Ring.

**Fixture will accept Quad or Triple Tube lamps.*

Features

Manufactured and Listed to UL 1598, ETL and CSA standards.
Suitable for Damp Locations.
Wet location under covered ceiling.

## REFLECTOR KIT

### OPEN

1 LT — 6″ Aperture

FL6006 Open

Finish Options

| | |
|---|---|
| SCL | Specular Clear "Alzak" |
| SGC | Soft Glow Clear |
| ECL | Etch Clear |
| WHT | White Reflector |

Options

| | |
|---|---|
| PF | Polished Flange |

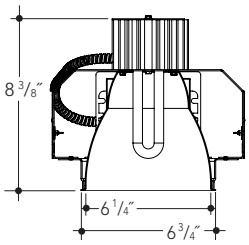


### WALL WASH

1 LT — 6″ Aperture

FL6106 Wall Wash

Finish Options

| | |
|---|---|
| SCL | Specular Clear "Alzak" |
| SGC | Soft Glow Clear |

Options

| | |
|---|---|
| PF | Polished Flange |
| DWW | Double Wall Wash |

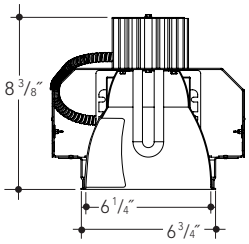


## ORDERING INFORMATION

EXAMPLE: A6VFL113E1-2-FL6006-SCL

| Lamps and Wattage<br>Quad and Triple Tube | Housing | Ballast | Reflector | Finish | Options |
|---|---|---|---|---|---|
| 1x13 | A6VFL113 | E1-2 | FL6006 | SCL | F |
| 1x18 | A6VFL118 | E3 | Wall Wash | SGC | EM |
| 1x26 | A6VFL126 | DL | FL6106 | ECL | DWW |
| 1x26, 1x32, 1x42 | A6VFL126-42 | DAX1 | | WHT | |
| | | DAX2 | | | |
| | | DA7 | | | |

Ballast Options
Electronic 120-277 volt is standard
E1-2 - Electronic (120-277V)
E3 - Electronic (347V)

Dimming Ballast Options
DL - Lutron Eco System (120-277V)
DAX1 - Advance Mark X (120V)
DAX2 - Advance Mark X (277V)
DA7 - Advance Mark VII (120-277V)

Options Descriptions
F - Fused
EM - Emergency Battery
DWW - Double Wall Wash

Vantage reserves the right to change components, finishes or design details in any manner which does not alter the installed appearance or reduce performance and intended function.

▲ See Options pages for other options and finishes.
Vantage recommends the use of Philips or Sylvania lamps.