Project Name: _____ Type: _____

DIMENSIONS

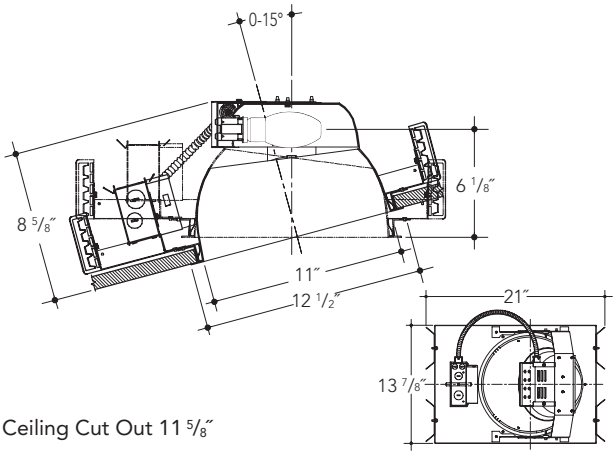

Ceiling Cut Out 11 5/8″

FEATURES

Adjustable height electrogalvanized plated steel mounting ears with cutouts for various mounting methods. Standard bars (included) are innovative and incorporate rigid formed cross sections, joist positioning tabs, integral nails, auxiliary nailholes, T-Bar slots and holes for locking bars to T-Bar using #8 self-tapping screws (by others). Bars extend 14″-24″. Ears will also accept Caddy Bar #517B for fast installation in T-Bar ceilings, bars extend 27″.

Electronic ballast, thermally protected. *UL Listed* component.

Aluminum socket housing with zinc plated steel quick assembly hardware. UL Listed socket and electrical connectors.

Heavy gauge electrogalvanized steel junction box, prewired and grounded with easy access from below, listed for through branch circuit wiring.

Heavy gauge spun aluminum low iridescent reflector with self trimming white painted flange. Polished Flange available.

Electrogalvanized plated steel frame. Adjustable from 0°-45° in the field.

REFLECTOR KIT

0/15 — 0° TO 15° SLOPE

SL100WH0-15

Finish Options

WHT White Reflector

Options

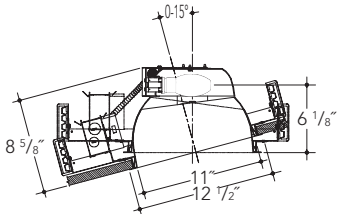

20/25 — 20° TO 25° SLOPE

SL100WH20-25

Finish Options

WHT White Reflector

Options

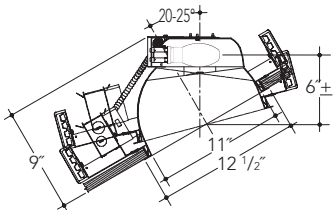

30/45 — 30° TO 45° SLOPE

SL100WH30-45

Finish Options

WHT White Reflector

Options

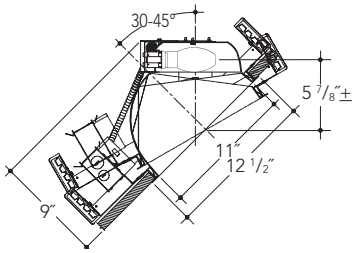

Features

Manufactured and Listed to UL 1598, ETL and CSA standards.
Suitable for Damp Locations.
Wet location under covered ceiling.

ORDERING INFORMATION

EXAMPLE: SLHF50MH1-2-SL100WH0-15-WHT

Lamps and Wattage	Housing	Slope Trim	Finish	Options
ED17				
50	SLHF50MH1-2	0°/15°	WHT	QR
70	SLHF70MH1-2	SL100WH0-15		CADDY 517B
100	SLHF100MH1-2	20°/25°		
150	SLHF150MH1-2	SL100WH20-25		
		30°/45°		
		SL100WH30-45		

Use open rated ED17 lamps only.

Fixtures rated 120-277 Volt Standard

Options Descriptions

QR - Quartz Restrike

CADDY 517B - Caddy Bars 517B

Vantage reserves the right to change components, finishes or design details in any manner which does not alter the installed appearance or reduce performance and intended function.

▲ See Options pages for other options and finishes.
Vantage recommends the use of Philips or Sylvania lamps.