Project Name: _____ Type: _____

FRAME-IN KIT

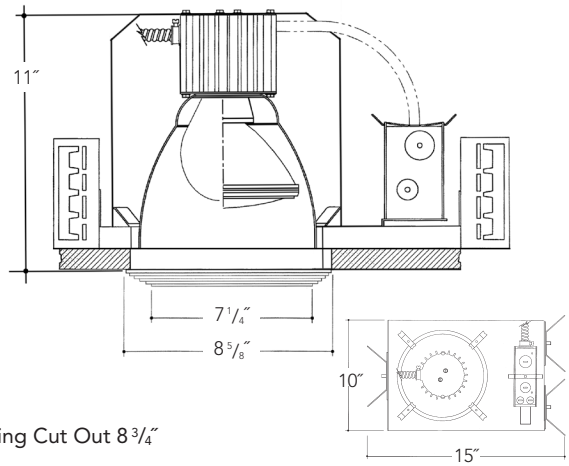

Ceiling Cut Out 8 3/4″

FEATURES

Adjustable height electrogalvanized plated steel mounting ears with cutouts for various mounting methods. Standard bars (included) are innovative and incorporate rigid formed cross sections, joist positioning tabs, integral nails, auxiliary nailholes, T-Bar slots and holes for locking bars to T-Bar using #8 self-tapping screws (supplied by others). Bars extend 14″-24″. Ears will also accept Caddy Bar #520 for fast installation in T-Bar ceilings, bars extend 27″.

Heavy gauge electrogalvanized steel junction box, prewired and grounded. Listed for through branch circuit wiring. Thermal cutout provided.

Heavy gauge spun aluminum reflector with self trimming white painted flange. Polished Flange available.

Extruded aluminum heat sink socket cup with Zinc plated steel hardware for fast assembly. *UL Listed* medium base porcelain socket, with nickel plated brass screw shell.

Electrogalvanized plated steel frame.

Heavy gauge spun aluminum vertical reflector with vandal resistant lens holder and aluminum trim ring. Lens is silicone sealed and supplied with neoprene foam gasketing. Threaded tamper-resistant panhead screws included.

Reflector support yoke.

Electrogalvanized plated steel frame.

Machined aluminum trim. Standard finish White, Black, Bronze and Silver also available.

Features

Manufactured and Listed to UL 1598, ETL and CSA standards.
Suitable for Damp Locations.
Wet location under covered ceiling.

REFLECTOR KIT

VANDAL RESISTANT

Incandescent - Step Trim — 8″ Aperture

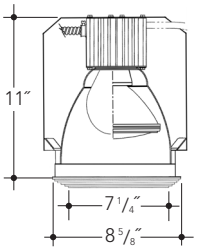

VVR82	Vertical Incandescent

Lens Options

11FR	Tempered Frosted Glass
11PFR	Frosted Polycarbonate
14	Tempered Prismatic Lens (C73 Pattern)
14P	Polycarbonate Prismatic Lens (C73 Pattern)

Options

WHT	White
BLK	Black
BZ	Bronze
CS	Silver
CC	Custom Color

SMOOTH VANDAL RESISTANT

Incandescent - Smooth Trim — 8″ Aperture

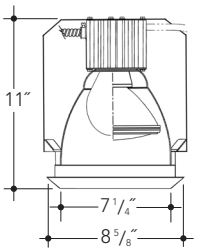

VVRSM82	Vertical Incandescent

Lens Options

11FR	Tempered Frosted Glass
11PFR	Frosted Polycarbonate
14	Tempered Prismatic Lens (C73 Pattern)
14P	Polycarbonate Prismatic Lens (C73 Pattern)

Options

WHT	White
BLK	Black
BZ	Bronze
CS	Silver
CC	Custom Color

ORDERING INFORMATION

EXAMPLE: VVR8INC200-VVR82-11FR-WHT

Lamps/Wattage	Housing	Reflector	Lenses	Color	Options
A23	VVR8INC	Step Trim	11FR	WHT	F
200		VVR82	11PFR	BLK	PR
A21		Smooth Trim	14	BZ	SD
150		VVRSM82	14P	CS	
PAR20/30/38				CC	
120					

Options Descriptions

F - Fuse
PR - Plaster Ring
SD - Step Down Transformer (Speficy)

Vantage reserves the right to change components, finishes or design details in any manner which does not alter the installed appearance or reduce performance and intended function.

▲ See Options pages for other options and finishes.